niche
Environment and Heritage

90 Garlicks Range BioBank Site, Orangeville NSW

BioBanking Assessment Report

Prepared for Key Property Group

August 2016

Document control

Project no.: 2717

Project client: Key Property Group

Project office: Sydney NSW

Document description: A BioBanking Assessment Report for the 90 Garlicks Range Road, Orangeville BioBank Site

Project Director: Rhidian Harrington

Project Manager: Luke Baker

Authors: Luke Baker

Internal review: Rhidian Harrington

Document status: Rev0

Document address: P:\Projects\2000s\2700s\2717 90 Garlicks Range Road BioBank Site\Report\BioBanking Assessment report

Local Government Area: Wollondilly

Authors	Revision number	Internal review	Date issued	Signature
Luke Baker	Rev0	Rhidian Harrington	26/07/16	RH

Niche Environment and Heritage

A specialist environmental and heritage consultancy.

Head Office

Niche Environment and Heritage
PO Box W36
Parramatta NSW 2150
Email: info@niche-eh.com
All mail correspondence should be through our Head Office.

Sydney

0488 224 888

Central Coast

0488 224 999

Illawarra

0488 224 777

Armidale

0488 224 094

Newcastle

0488 224 160

Mudgee

0488 224 025

Port Macquarie

0488 774 081

Brisbane

0488 224 036

Cairns

0488 284 743

© Niche Environment and Heritage, 2016

Copyright protects this publication. Except for purposes permitted by the Australian *Copyright Act 1968*, reproduction, adaptation, electronic storage, and communication to the public is prohibited without prior written permission. Enquiries should be addressed to Niche Environment and Heritage, PO Box W36, Parramatta NSW 2150, Australia, email: info@niche-eh.com.

Any third party material, including images, contained in this publication remains the property of the specified copyright owner unless otherwise indicated, and is used subject to their licensing conditions

Cover photograph: Western Sydney Dry Rainforest at the site

Table of Contents

Executive Summary 1

1. Introduction 2

1.1 Definitions and abbreviations 2

1.2 The Garlicks Range property 2

1.3 Eligibility as a BioBank Site 3

1.4 Background resources 3

1.5 Qualifications 3

1.6 Assumptions and limitations 3

2. BioBanking Assessment 4

2.1 Site details 4

2.2 Landscape value 4

2.3 Vegetation Zones 6

2.4 Geographic and habitat features 9

2.5 Identified populations 9

2.6 Site survey details 9

2.7 Site values 10

3. Credit calculations 12

3.1 Ecosystem credits 12

3.2 Species credits 12

4. Conclusion 13

References 14

Appendix 1. Floristic data 25

Appendix 2. Full vegetation alignment 29

Appendix 3. Vegetation classification and community descriptions (Niche 2012) 30

Appendix 4. BioBank plot site attribute data 34

Appendix 5. Final BioBanking Credit Report 35

List of Figures

Figure 1. Garlicks Range BioBank Site in a regional context 16

Figure 2. Garlicks Range BioBank Site, Lot and DPs 17

Figure 3. Landscape assessment – CMA regions and patch size 18

Figure 4. Landscape assessment circles, Mitchell Landscapes and IBRA sub-region 19

Figure 5. Strategic location 20

Figure 6. Survey effort 21

Figure 7. Site-validated vegetation mapping (Niche 2015 after NPWS 2003) 22

Figure 8. BioBanking PCTs, vegetation zones and management zones 23

List of Tables

Table 1. Site details 4

Table 2. Garlicks Range Road BioBanking assessment of landscape native vegetation cover 5

Table 3. Vegetation zones and survey effort 8

Table 5. Predicted threatened fauna 10

Table 6. Management zones and gain in site value 11

Table 7. Ecosystem credits created 12

Executive Summary

Niche Environment and Heritage Pty Ltd (Niche) was commissioned by Key Property Group to conduct a BioBanking assessment of 90 Garlicks Range Road Orangeville NSW, known as the 'Garlicks Range Road BioBank Site'. This document is the BioBanking Assessment Report (BAR), which will accompany a formal application for a BioBanking Agreement to be submitted for the site.

Field surveys were carried out by Niche in October 2015.

The BioBanking field survey was undertaken by Nathan Smith, and reporting completed by Luke Baker of Niche, both of whom are Accredited BioBanking Assessors.

The site will provide in-perpetuity management and security for 23.3 hectares of Cumberland Plain Woodland and 21.9 hectares of Western Sydney Dry Rainforest, both communities are listed as Threatened Ecological Communities (listed as a critically endangered ecological communities under the NSW *Threatened Species Conservation 1995* (TSC Act) and Commonwealth *Environment Protection and Biodiversity Conservation Act 1999* (EPBC Act).

A total of 521 ecosystem credits may be generated at the Garlicks Range BioBank Site, including 273 credits for the conservation of Cumberland Plain Woodland, and 248 credits for Western Sydney Dry Rainforest.

Additional species credits may be generated with further targeted field survey or where validated opportunistic observations are made in the future.

A BioBank Site management plan, including costing using the credit pricing spreadsheet, have been attached as Appendices to this report.

A BioBanking Agreement application form will be submitted to OEH for approval.

1. Introduction

Niche Environment and Heritage Pty Ltd (Niche) was commissioned by Key Property Group on behalf of Key Property Group to conduct a BioBanking assessment of 90 Garlicks Range Road Orangeville NSW, known as the 'Garlicks Range Road BioBank Site' (Figure 1). This document is the BioBanking Assessment Report (BAR), which will accompany a formal application for a BioBanking Agreement to be submitted for the site

This document constitutes a full BioBanking Assessment Report (BAR) for the purposes of submission of an application for a BioBanking Agreement.

The BioBanking Scheme, established under Part 7A of the NSW *Threatened Species Conservation Act 1995* (TSC Act), enables a streamlined method for biodiversity assessment (i.e. the BioBanking Assessment Methodology or BBAM) and is accompanied by a rigorous and credible offsetting scheme for the impacts from development. It provides mechanisms for the consideration of impacts on listed threatened species and communities and the criteria for the offsetting of these impacts.

The BBAM incorporates a 'maintain and improve' test to determine whether or not there will be a net impact on threatened biodiversity, either for Plant Community Types (PCTs), including threatened fauna that are predicted from PCTs, or separately for those threatened species with specific habitat requirements. The rules used in the assessment are designed to meet the objectives of the TSC Act. The results of a BioBanking assessment are expressed as the number of biodiversity credits (ecosystem and/or species credits) required to be retired by a development site and the number of credits generated and available for retirement at a BioBank site (i.e. the offset site).

1.1 Definitions and abbreviations

BBAM	*BioBanking Assessment Methodology* (2014)
BBCC	BioBanking Credit Calculator (Version 4.0, 2014)
CEEC	Critically Endangered Ecological Community
PCT	Plant Community Types
ha	Hectare
OEH	NSW Office of Environment and Heritage (formerly DECCW)
TSC Act	NSW *Threatened Species Conservation Act 1995*
EP&A Act	NSW *Environmental Planning and Assessment Act 1979*
EPBC Act	Commonwealth *Environment Protection and Biodiversity Conservation Act 1999*

1.2 The Garlicks Range property

The proposed BioBank site is located at 90 Garlicks Range Road (Lot 25 DP811476 and Lot 70 DP751295) Orangeville, NSW. It is a heavily vegetated property, known to contain Cumberland Plain Woodland, which is listed as a critically endangered ecological community (CEEC) under the TSC and EPBC Acts.

The location of the site in a regional context is shown in Figure 1.

1.3 Eligibility as a BioBank Site

Niche has been advised by the landowner that he is fully aware of his rights and responsibilities as a potential BioBank Site owner and, in particular, that he has read and understands Section 3.5 of the *Guide to establishing a biobank site* (OEH 2009). Key Property Group has conducted the necessary land title investigations to ensure that the potential Garlicks Range Road property is eligible to be established as a BioBank Site.

1.4 Background resources

This BioBanking assessment has been prepared using the following resources:

- The *BioBanking Assessment Methodology 2014* or 'BBAM 2014' (OEH 2014) – the methodology used to undertake a BioBanking assessment.
- BioBanking Credit Calculator or 'BBCC' (Version 4.0, 2014).
- The Atlas of NSW Wildlife (accessed July 2016).
- The NSW VIS database as the primary source for the NSW Plant Communities Type (PCT) classification.

1.5 Qualifications

The BioBanking assessment, for which this BioBanking Assessment Report has been produced, utilises the BBAM 2014 and Version 4.0 of the BBCC. The field assessment and data analysis was conducted by Nathan Smith. The reporting and credit calculations was completed by Luke Baker. Both Nathan and Luke are Accredited BioBanking Assessors.

1.6 Assumptions and limitations

The purpose of this report is to provide an assessment of the biodiversity value of the Garlicks Range Road BioBank Site, expressed in terms of biodiversity credits. This report meets the requirements for the submission of a BioBanking Assessment Report for a formal BioBanking Agreement.

The following tasks were carried out to complete this BioBanking assessment:

1. Field surveys – data used in this BioBanking assessment was obtained from surveys conducted in October 2015.
2. Production of figures including vegetation maps.
3. Vegetation calculations in hectares for each of the PCTs present on the site.
4. Ecosystem credit calculations using BioBanking plot site attribute data.

Field surveys were undertaken in accordance with the BBAM 2014 and specifically included the collection of BioBanking plot site attribute data, the determination of vegetation types from both on-site rapid observations and correlated floristic plot data.

No targeted surveys were conducted for threatened fauna that can generate Species Credits, nor were seasonal surveys for cryptic threatened flora, for which Species Credits could also be generated.

2. BioBanking Assessment

This section describes the information and the assumptions of the BioBanking assessment for the Garlicks Range Road BioBank Site.

2.1 Site details

The opening tabs of the BBCC include details of some importance to the final BioBanking credit calculations. The information contained in these tabs is all from queries of relevant GIS layers (Table 1 and Figure 2). The site is located in the Wollondilly LGA and Hawkesbury-Nepean CMA (Figure 3).

Table 1. Site details

GIS Item	Entry
CMA	Hawkesbury-Nepean
LGA	Wollondilly
Lot(s) and DP	DP811476 Lot 25 DP751295 Lot 70

2.2 Landscape value

2.2.1 Assessment circles

Appendix 6 of the BBAM 2014 specifies the layout of the Assessment Circles. To assess the current and future extent of native vegetation cover for the BioBank Site, the assessor must:

1. Identify an inner and an outer assessment circle in the ratio of 1:10 from the following combinations;

Inner assessment circle (ha)	Outer assessment circle (ha)
100	1,000
200	2,000
300	3,000
400	4,000
500	5,000
1,000	10,000

2. Centre the inner and outer assessment circles on the area of the BioBank Site that will involve the greatest increase in native vegetation cover; and
3. Using a GIS, calculate the current and future extent of native vegetation cover in the inner and outer assessment circles in hectares and convert these to a five per cent threshold increment from zero to 100 (i.e. 0-5, 6-10, 11-15...96-100). The future extent is based on the likely improved cover within the BioBank Site itself.

Assessment circles – Garlicks Range Road BioBank Site

A single 1,000 hectare outer circle and a 100 hectare inner circle were utilised for this assessment and centred on the area of greatest improvement on the BioBank Site (Figure 4).

Native vegetation cover within the outer circle was calculated at 36-40 per cent cover and 91-95 per cent cover for the inner circle using vegetation mapping (NPWS 2003) and recent aerial photography (LPI 2013). As all the vegetation within the BioBank site qualifies as native vegetation under the NSW Native Vegetation Act 2003 (NV Act), there will be no net improvement in native vegetation cover.

Table 2 is a summary of the native vegetation cover assessment.

Table 2. Garlicks Range Road BioBanking assessment of landscape native vegetation cover

Landscape factor	Entry	
IBRA subregion	Cumberland	
Mitchell Landscape	Kurrajong Fault Scarp	
Patch size	2000 ha	
	Before BioBank	After BioBank
% Native Vegetation Cover in 1000ha Circle	36-40 %	36-40 % (no change)
% Native Vegetation Cover in 100ha Circle	91-95 %	91-95 % (no change)

The landscape assessment resulted in a Landscape Score of 18.00 after a patch size greater than 501 hectares was entered for all of the vegetation zones, which were in 'Moderate to Good' condition (refer to Section 2.2.2).

2.2.2 Connectivity assessment

Strategic location

A BioBank Site is in a strategic location if it includes land that is:

1. An area identified by the Assessor as being part of a state significant biodiversity link and in a plan approved by the Chief Executive of OEH, or
2. An area identified by the Assessor as being part of a regional significant biodiversity link and in a plan approved by the Chief Executive of OEH, or
3. Streams of the following orders and buffers;
    - A riparian buffer of 50 metres on one or both sides of a 6th order stream or higher, or
    - A riparian buffer of 40 metres on one or both sides of a 4th or 5th order stream, or
    - A riparian buffer of 30 metres on one or both sides of a 3rd order stream, or
4. Wetlands;
    - A riparian buffer of 50 metres for an important wetland as mapped in the DIWA database, or
    - A riparian buffer of 50 metres for an estuarine area.
    - A riparian buffer of 20 metres for a local wetland.

An assessment of the stream order (Appendix 2 of BBAM 2014) of the local creeks and rivers was made with GIS by examining a combination of the NSW Hydrological Database and digital 1:25,000 topographic maps.

Wattle Creek runs west to east through the Garlicks Range BioBank site. The creek is a 3rd order stream and therefore a riparian buffer of 30 metres applies in terms of assessing strategic location.

Figure 5 demonstrates that the site conserves a riparian buffer of 30 metres on one side of a 3rd order stream and is therefore in a strategic location.

The site does not conserve important wetlands, estuarine areas or local wetlands (or their buffer areas) and no state or regional biodiversity corridors, as approved by OEH, exist on the site.

Assessment of primary connecting link

An assessment of the primary connecting link (i.e. connectivity width and condition) is not required because the Garlicks Range BioBank Site is in a strategic location, as defined in the BBAM 2014.

Assessment of patch size

The final component of the landscape assessment is the patch size to which the BioBank Site belongs. Patch size is defined in the BBAM 2014 as an area of native vegetation that:

a) occurs on the BioBank Site;

b) is in moderate to good condition; and

c) includes clumps of wooded vegetation no more than 100 metres apart, also in moderate to good condition.

The patch may extend beyond the BioBank Site and onto adjoining land.

The patch size of the native vegetation on the BioBank Site is illustrated in Figure 3, which demonstrates that native vegetation cover of the site extends into extensive areas of native vegetation cover to the west of the Site. This area is part of the Nattai National Park, Burragorang Conservation Area and Blue Mountains National Park. This area constitutes many thousands of hectares of contiguous native vegetation. A nominal patch size of 2,000 hectares, which is greater than the 1,000 hectare maximum allowed by the BBAM (2014) has been chosen (i.e. the maximum score for patch size is applicable).

2.3 Vegetation Zones

2.3.1 Floristic survey

Flora recorded within the 20 x 20 metre plot nested within the 50 x 20 metre BioBanking plot were, as a minimum, assigned Braun-Blanquet visual cover-abundance scores, while a single representative plot for each vegetation type was assigned separate cover and abundance scores as per Table 1 of BBAM (2014). Plot locations are shown in Figure 6. The full list of species recorded at each of the plot locations is provided in Appendix 1, along with the Braun-Blanquet scores. Niche report on the Braun-Blanquet cover-abundance scores as this provides more useful raw data for a statistical multivariate analysis using the PATN statistical program than the data collected in Table 1 of BBAM (2014), allowing vegetation associations to be grouped and assessed.

Combined with spatially alternate Rapid Data Points (RDPs) as floristic summaries (also shown in Figure 6), the floristic data collection and method of analysis employed by Niche is scientifically robust, allows rapid data collection and analysis, and is repeatable. A single experienced botanist is only ever used for a single survey for the collection of floristic data, in this case Nathan Smith.

In order to determine the vegetation zones on site, as required by the BBAM, Niche conducted a full floristic multivariate analysis with the PATN statistical program and correlated this to RDPs, field map mark-ups and API. Appendix 3 includes the full floristic analysis, descriptions of vegetation types derived from it and a justification of the chosen Plant Community Types (PCTs) as used in this assessment and required by the BioBanking Credit Calculator.

2.3.2 Plant Community Types and condition

The result of the floristic analysis is mapped in Figure 7 using NPWS (2003) vegetation units as a basis. The analysis has concluded that two distinct plant communities are present on the site. These plant communities are listed in Table 3, which also provides the full alignment to NSW Plant Community Types (PCTs). Table 3 also provides the derivation of the BioBanking vegetation zones and management zones, as used in the BBCC. A full alignment of these vegetation communities to TECs, PCTs, and Keith Classes and Formations is provided in Appendix 2 and full descriptions are provided in Appendix 3.

BioBanking vegetation zones are composed of a PCT and condition class. All of the vegetation zones present on-site were in Moderate – Good condition, as defined in the BBAM.

Table 3. Vegetation zones and survey effort

Vegetation community (Niche 2016 after NPWS 2003) *	Area (ha)	Veg Zone Number	Veg Zone Area (ha)	Formation (Keith 2004)	PCT code and name (abbrev.)	Biobanking Condition	Veg Zone Name	Plots required	Plots completed
1. Shale Hills Woodland - CEEC	21.9	1	21.9	Grassy Woodlands	HN529 – Grey Box - Forest Red Gum grassy woodland	Mod-Good	HN529_Mod/Good	4	7
2. Western Sydney Dry Rainforest	20.2	2	20.2	Rainforest	HN538 – Grey Myrtle dry rainforest	Mod-Good	HN538_Mod/Good	4	6
Total vegetation (managed)	**42.1**		**42.1**						
Management access track	*3.1*								
Total BioBank Site area	**45.2**								

** A full alignment of these on-site vegetation types to Hawkesbury – Nepean PCTs, vegetation formations (Keith 2004) and threatened ecological communities (TECs) as listed on the TSC Act is contained in Appendix 2. Descriptions of each vegetation type, as they occur on the site, is provided in Appendix 3.*

2.3.3 Threatened ecological communities (TECs)

The Shale Plains Woodland vegetation communities align to the Cumberland Plain Woodland CEEC as listed on both the TSC EPBC Acts.

The Western Sydney Dry Rainforest aligns to the Western Sydney Dry Rainforest EEC as listed on both the TSC and EPBC Acts.

Together, these two vegetation zones will secure the in-perpetuity conservation, management and funding of 42.1 hectares of TECs.

2.4 Geographic and habitat features

The geographic and habitat features tab in the BBCC is designed to further filter threatened fauna whose habitats cannot be reliably predicted by PCTs as surrogates and also for all threatened flora. If these species are present on the site, then species credits can be generated. This assessment does not provide any species calculations, however the site may be surveyed in the future for threatened fauna species that generate species credits.

2.5 Identified populations

No 'identified populations', as defined in the BBAM, have yet been defined. Note that 'identified populations' are wholly different from threatened populations or species as listed on the TSC Act.

2.6 Site survey details

2.6.4 Threatened fauna predicted – ecosystem credits

The BBCC predicts that habitat exists for the threatened fauna listed in Table 4 within the PCTs on the BioBank Site. The 'TS offset multiplier' in Table 4 is the component of the ecosystem credit calculation that directly relates to the value of the PCT as a surrogate for each particular species. The largest multiplier, in this case 3.0 for the Barking Owl, is used in the calculation. Surveys are not required for these species though some can be excluded if supported by survey or expert judgement.

Table 4. Predicted threatened fauna

Common name	Scientific name	Tg multiplier
Barking Owl	Ninox connivens	3.0
Black-chinned Honeyeater (eastern subspecies)	Melithreptus gularis subsp. gularis	1.3
Brown Treecreeper (eastern subspecies)	Climacteris picumnus subsp. victoriae	2.0
Bush Stone-curlew	Burhinus grallarius	2.6
Diamond Firetail	Stagonopleura guttata	1.3
Eastern False Pipistrelle	Falsistrellus tasmaniensis	2.2
Eastern Freetail-bat	Mormopterus norfolkensis	2.2
Flame Robin	Petroica phoenicea	1.3
Gang-gang Cockatoo	Callocephalon fimbriatum	2.0
Greater Broad-nosed Bat	Scoteanax rueppellii	2.2
Hooded Robin (south-eastern form)	Melanodryas cucullata subsp. cucullata	1.7
Little Eagle	Hieraaetus morphnoides	1.4
Little Lorikeet	Glossopsitta pusilla	1.8
Masked Owl	Tyto novaehollandiae	3.0
Painted Honeyeater	Grantiella picta	1.3
Powerful Owl	Ninox strenua	3.0
Scarlet Robin	Petroica boodang	1.3
Sooty Owl	Tyto tenebricosa	3.0
Speckled Warbler	Chthonicola sagittata	2.6
Spotted Harrier	Circus assimilis	1.4
Spotted-tailed Quoll	Dasyurus maculatus	2.6
Square-tailed Kite	Lophoictinia isura	1.4
Superb Fruit-dove	Ptilinopus superbus	1.3
Swift Parrot	Lathamus discolor	1.3
Turquoise Parrot	Neophema pulchella	1.8
Varied Sittella	Daphoenositta chrysoptera	1.3
Yellow-bellied Sheathtail-bat	Saccolaimus flaviventris	2.2

2.7 Site values

2.7.1 Survey effort

As has been described in Section 2.3.2 and Table 3, the minimum number of BioBanking plots was conducted as required by the BBAM (2014). BioBanking site attribute data is provided in Appendix 5 and has been stratified per vegetation zone. Site attribute data was saved in the BioBanking plots template and imported into the BBCC for each of the vegetation zones.

2.7.2 Management zones

For the purposes of this assessment, management zones were directly matched to the vegetation zones. This distinction was made due to the inherently uniform management inputs that would be required in each of the vegetation zones.

Default gains in site attribute scores for management, as allowed by the BBCC, were accepted for each of the vegetation zones present on the site. No additional gain has been applied for.

The increase in site value is demonstrated in Table 5.

Table 5. Management zones and gain in site value

Vegetation zone	Management zone	Area (ha)	Landscape score	Current site value	Future site value	Gain in site value
HN529 Grey Box - Forest Red Gum grassy woodland on shale of the southern Cumberland Plain, Sydney Basin Bioregion	mz1	21.9	18	1. 1	7 .71	. 0
HN538 Grey Myrtle dry rainforest of the Sydney Basin Bioregion and South East Corner Bioregion	mz2	20.2	18	4 .7	77.	7.

The default increase in site value assumes that the future conservation management of the Garlicks Range site is secured and funded in perpetuity to achieve improve or maintain outcomes for threatened biodiversity.

The BioBanking Site Management Action Plan, which accompanies the BioBanking Agreement application, describes in detail the actions to be implemented within the site to achieve improvement in biodiversity values.

3. Credit calculations

The BioBanking Credit Report generated from the BBCC and incorporating the assumptions as described in Section 2, has been provided in Appendix 5. This is an automated report from the BBCC.

3.1 Ecosystem credits

A total of 521 ecosystem credits will be generated at the Garlicks Range BioBank Site (Table 6); 273 credits for 21.9 hectares of HN529, and 248 credits for 20.2 hectares of HN538.

Table 6. Ecosystem credits created

Veg zone no.	Vegetation zone	MZ	MZ area (ha)	Ecosystem credits	PCT (abbrev.)	Total credits for PCT
1	HN529_Mod/Good (Shale Plains Woodland)	mz1	21.9	273	HN529 Grey Box - Forest Red Gum grassy woodland	273
2	HN538_Mod/Good (Western Sydney Dry Rainforest)	mz2	20.2	248	HN538 Grey Myrtle dry rainforest	248
					Total	**521**

3.2 Species credits

No species credits have been generated to date for the Garlicks Range BioBank site. Species credits may be generated in the future for the BioBank site.

4. Conclusion

This BioBanking Assessment Report describes the assumptions and results of a BioBanking assessment carried out by Niche for the Garlicks Range BioBank Site at Orangeville, NSW.

This assessment has been completed in accordance with the *BioBanking Assessment Methodology 2014* (OEH 2014) and Version 4.0 of the BioBanking Credit Calculator.

The site will provide in-perpetuity management and security for 42.1 hectares of the Cumberland Plain Woodland and Western Sydney Dry Rainforest, which are both listed as threatened ecological communities nationally and in NSW.

A total of 521 ecosystem credits will be generated at the Garlicks Range BioBank Site including 273 credits for the conservation of Cumberland Plain Woodland, and 248 credits for Western Sydney Dry Rainforest.

Species credits may be generated as a variation to the BioBanking Agreement with further targeted field survey or where validated opportunistic observations are made in the future.

References

Atlas of NSW Wildlife, accessed July 2016. Licensed user access through BioNet web-site, http://www.bionet.nsw.gov.au/.

Keith (2004) *Ocean Shores to Desert Dunes: The Native Vegetation of NSW and the ACT*, NSW Department of Environment and Conservation, Hurstville NSW.

NPWS (2003) *Native Vegetation of the Cumberland Plain*, NSW National Parks and Wildlife Service (NPWS).

OEH (2014) *BioBanking Assessment Methodology 2014*, NSW Office of Environment and Heritage (OEH), Sydney, NSW.

OEH (2009) *Guide to establishing a BioBank site*, NSW Office of Environment and Heritage (OEH), Sydney, NSW.

Figures

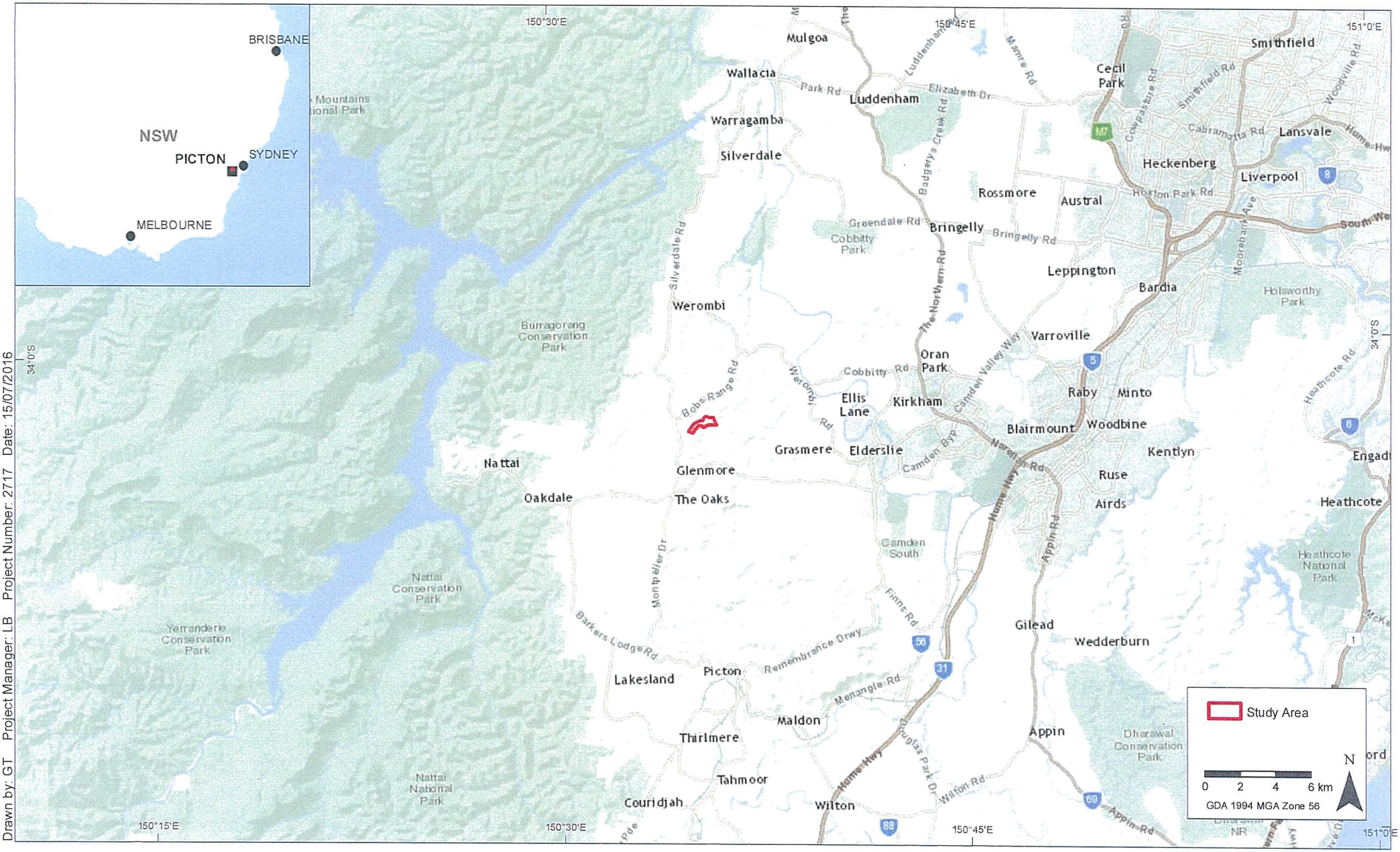

Drawn by: GT Project Manager: LB Project Number: 2717 Date: 15/07/2016

niche Environment and Heritage

Garlicks Range BioBank Site in a regional context

90 Garlicks Range Road Biobanking Assessment

FIGURE 1

Path: T:\spatial\projects\a2700\a2717_90GarlicksRangeRd\Maps\report\2717__Figure_1_StudyArea.mxd

Date: 15/07/2016
Project Number: 2717
Project Manager: LB
Drawn by: GT

Garlicks Range BioBank Site, Lot and DPs

90 Garlicks Range Road Biobanking Assessment

FIGURE 2

Imagery: (c) NearMap (April 2016)

niche
Environment and Heritage

Path: T:\spatial\projects\a2700\a2717_90GarlicksRangeRd\Maps\report\2717_Figure_2_Site.mxd

Drawn by: GT Project Manager: LB Project Number: 2717 Date: 15/07/2016

Garlicks Range BioBank Site, Landscape Assessment: CMA regions and patch size

90 Garlicks Range Road Biobanking Assessment

niche Environment and Heritage

Path: T:\spatial\projects\a2700\a2717_90GarlicksRangeRd\Maps\report\2717_Figure_3_CMA.mxd

FIGURE 3

Imagery: (c) LPI (9/4/2012)

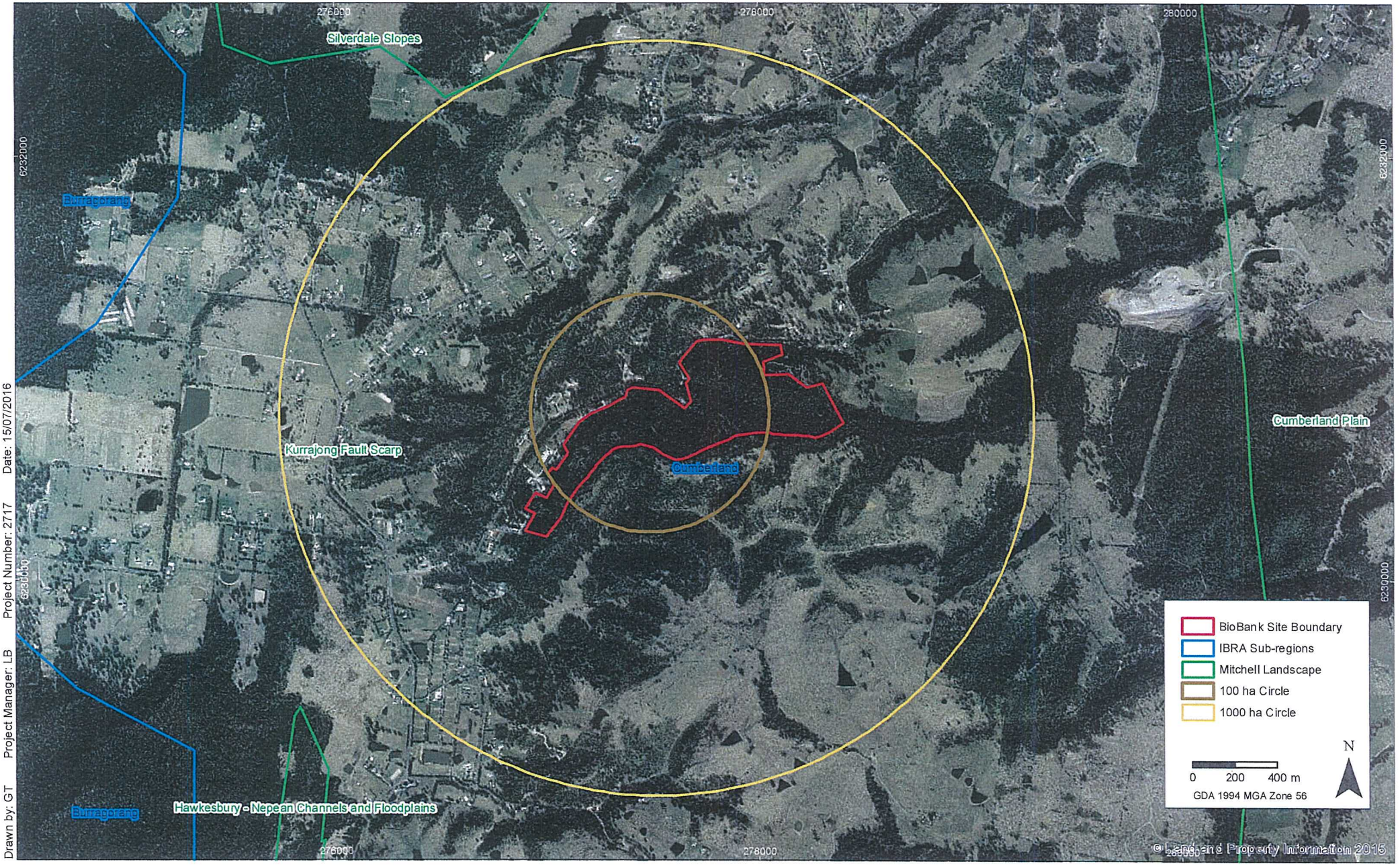

Garlicks Range BioBank Site, Landscape assessment circles: Mitchell Landscapes and IBRA sub-region

90 Garlicks Range Road Biobanking Assessment

FIGURE 4

niche Environment and Heritage

Path: T:\spatial\projects\a2700\a2717_90GarlicksRangeRd\Maps\report\2717_Figure_4_IBRA.mxd

Imagery: (c) LPI (9/4/2012)

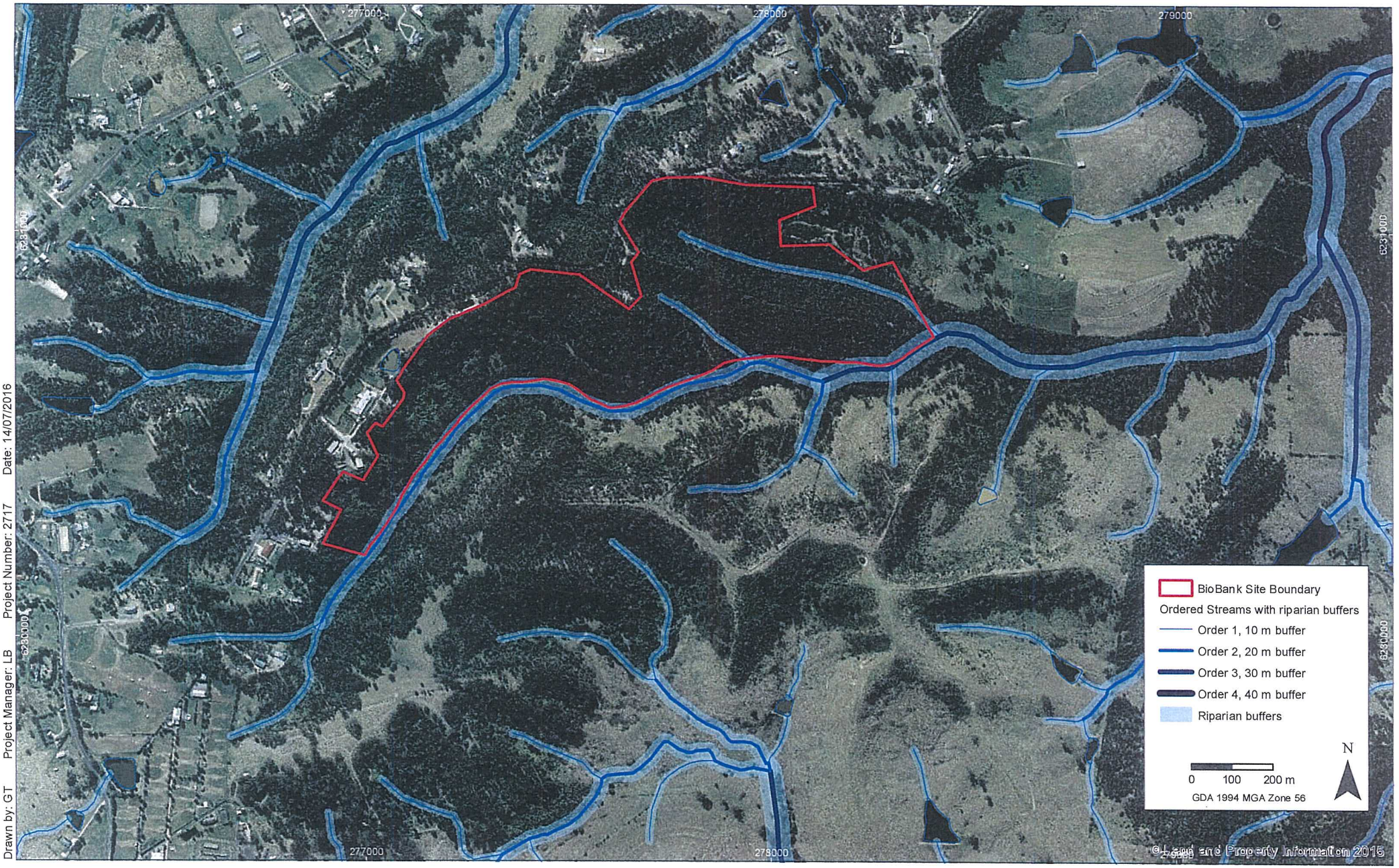

Drawn by: GT Project Manager: LB Project Number: 2717 Date: 14/07/2016

Garlicks Range BioBank Site, Strategic location

90 Garlicks Range Road Biobanking Assessment

FIGURE 5

Imagery: (c) LPI (9/4/2012)

niche Environment and Heritage

Path: T:\spatial\projects\a2700\a2717_90GarlicksRangeRd\Maps\report\2717_Figure_5_Strategic.mxd

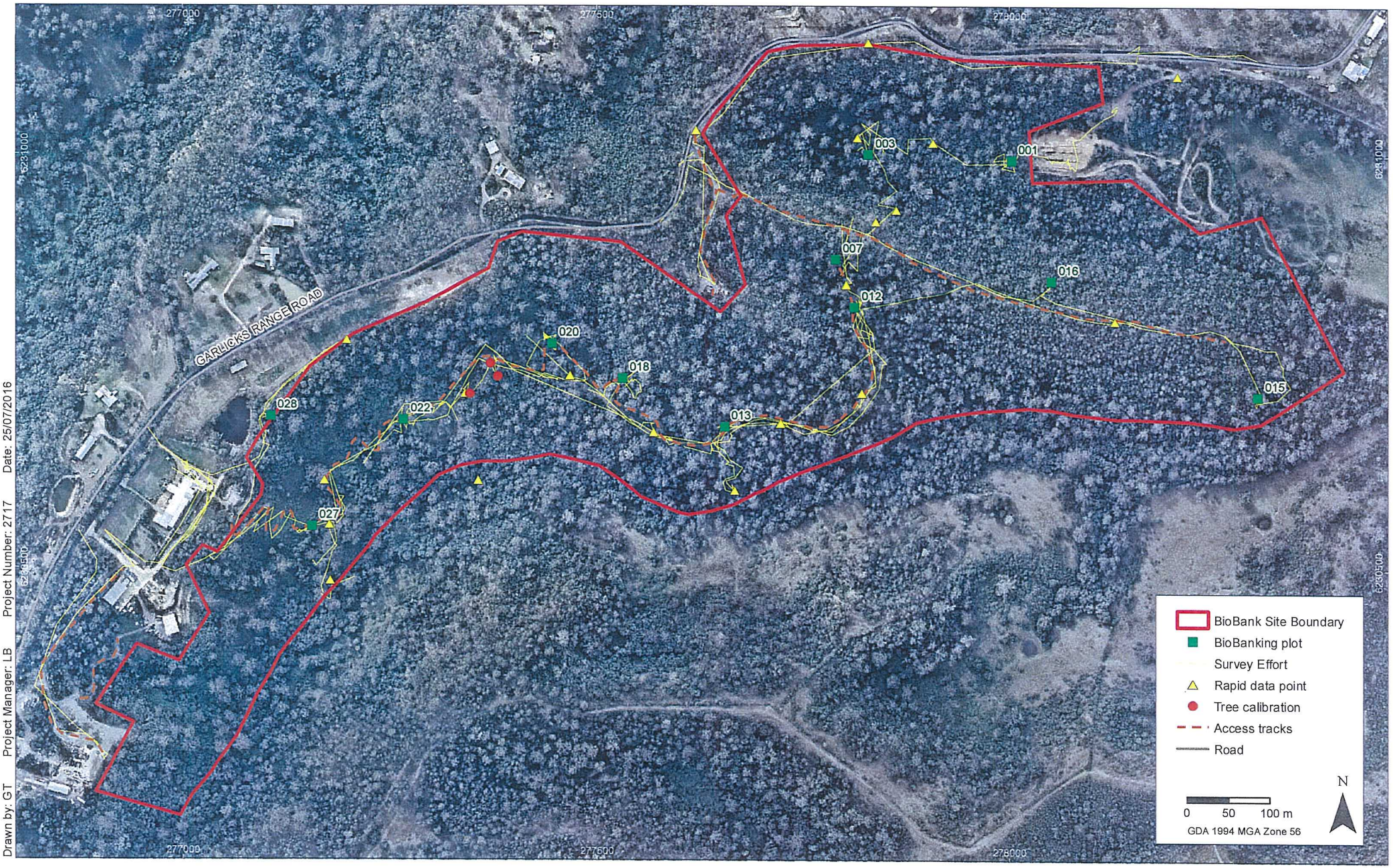

Garlicks Range BioBank Site, survey effort

90 Garlicks Range Road Biobanking Assessment

FIGURE 6

Imagery: (c) NearMap (April 2016)

niche Environment and Heritage

Path: T:\spatial\projects\a2700\a2717_90GarlicksRangeRd\Maps\report\2717_Figure_6_Effort.mxd

Site-validated vegetation mapping

90 Garlicks Range Road Biobanking Assessment

FIGURE 7

Imagery: (c) NearMap (April 2016)

niche Environment and Heritage

Path: T:\spatial\projects\a2700\a2717_90GarlicksRangeRd\Maps\report\2717_Figure_7_Vegetation.mxd

Vegetation zones, management zones and photo-points

90 Garlicks Range Road Biobanking Assessment

FIGURE 8

niche Environment and Heritage

Path: T:\spatial\projects\a2700\a2717_90GarlicksRangeRd\Maps\report\2717_Figure_8_MgtZones.mxd

Imagery: (c) NearMap (April 2016)

Appendices

Appendix 1. Floristic data

Plant species recorded at 90 Garlicks Range Road – October 2015			Plots - Shale Hills Woodland (HN 529)							Plots - Western Sydney Dry Rainforest (HN538)				
Species	**Common Name**	**Exotic**	**001**	**003**	**007**	**015**	**016**	**018**	**028**	**012**	**013**	**020**	**022**	**027**
Abutilon oxycarpum var. *oxycarpum*														1
Acacia implexa	Hickory Wattle		1				1	2			1			
Acacia melanoxylon	Blackwood												2	
Adiantum aethiopicum	Common Maidenhair		3	2	3	4		3	2					
Adiantum hispidulum	Rough Maidenhair								1					
Ageratina spp.		Yes		2										
Alectryon subcinereus	Wild Quince										1	2		
Allocasuarina torulosa	Forest Oak								3					
Aphanopetalum resinosum	Gum Vine								2	1	2			
Araujia hortorum	Moth Vine	Yes					1					1		2
Asparagus asparagoides	Bridal Creeper	Yes				1								
Backhousia myrtifolia	Grey Myrtle					4								
Brachychiton populneus	Kurrajong		2											
Breynia oblongifolia	Coffee Bush					1								
Brunoniella australis	Blue Trumpet					1								
Bursaria spinosa	Native Blackthorn							1						
Callistemon salignus	Willow Bottlebrush										1			
Carex inversa	Knob Sedge		2	1	1		1				2	2	2	
Cayratia clematidea	Native Grape				1									
Christella dentata	Binung			1	1									
Cirsium vulgare	Spear Thistle	Yes											1	
Cissus antarctica	Water Vine					1				2	2	3		4
Clematis aristata	Old Man's Beard		1	1		2		1	1		1	2	1	1
Clerodendrum tomentosum	Hairy Clerodendrum		2	2	2	1	1	2				1	2	
Commelina cyanea	Native Wandering Jew												1	

Plant species recorded at 90 Garlicks Range Road – October 2015			Plots - Shale Hills Woodland (HN 529)							Plots - Western Sydney Dry Rainforest (HN538)				
Species	**Common Name**	**Exotic**	**001**	**003**	**007**	**015**	**016**	**018**	**028**	**012**	**013**	**020**	**022**	**027**
Conyza bonariensis	Flaxleaf Fleabane	Yes											2	1
Corymbia maculata	Spotted Gum		4			3	3	4		2	4			
Daucus carota	Wild Carrot	Yes											2	
Dichondra repens	Kidney Weed		1	2		2	2			2	2	2	3	
Ehrharta erecta	Panic Veldtgrass	Yes										1		
Einadia hastata	Berry Saltbush								2					
Entolasia marginata	Bordered Panic												1	
Eucalyptus bosistoana	Coast Grey Box		3	3	4	1				3	2			
Eucalyptus crebra	Narrow-leaved Ironbark								3					
Eucalyptus quadrangulata	White-topped Box											3	3	
Eucalyptus tereticornis	Forest Red Gum			3	1				3	1				
Eustrephus latifolius	Wombat Berry							1						
Exocarpos cupressiformis	Cherry Ballart								3					
Fimbristylis dichotoma	Common Fringe-sedge						1							
Geitonoplesium cymosum	Scrambling Lily		2	1	2	2	2	2	2					
Geranium homeanum													2	2
Glycine clandestina	Twining glycine													1
Glycine microphylla	Small-leaf Glycine											1	2	
Glycine tabacina	Variable Glycine		1	2			2	2	2	1	1			
Gomphocarpus fruticosus	Narrow-leaved Cotton Bush	Yes											1	
Imperata cylindrica	Blady Grass												3	
Juncus continuus			1											
Juncus usitatus							1							
Lantana camara	Lantana	Yes	1	3	3	2		1		5	5	4	2	5
Ligustrum lucidum	Large-leaved Privet	Yes						1					3	
Lomandra micrantha							1							
Marsdenia flavescens	Hairy Milk Vine									2	2			
Marsdenia rostrata	Milk Vine		3	2	1	2		1	2	2		2		

Plant species recorded at 90 Garlicks Range Road – October 2015			Plots - Shale Hills Woodland (HN 529)							Plots - Western Sydney Dry Rainforest (HN538)				
Species	**Common Name**	**Exotic**	**001**	**003**	**007**	**015**	**016**	**018**	**028**	**012**	**013**	**020**	**022**	**027**
Medicago polymorpha	Burr Medic	Yes											2	
Melaleuca styphelioides	Prickly-leaved Tea Tree					3				4	1	3		
Melicope micrococca	Hairy-leaved Doughwood									1	3			
Microlaena stipoides	Weeping Grass			1					1		2	2	3	
Morinda jasminoides	Sweet Morinda					1								
Myrsine variabilis									2					
Notelaea longifolia	Large Mock-olive		1	2		2		2	2		2	1		
Nyssanthes diffusa	Barbwire Weed			1	1									
Olea europaea subsp. *cuspidata*	African Olive	Yes	4	4	4	3	4	4	3	4	3	2		1
Opercularia aspera	Coarse Stinkweed				1									
Opercularia diphylla	Stinkweed		1					2						
Oplismenus aemulus			2	3	1							3	2	
Opuntia stricta	Prickly Pear	Yes					1		1					
Oxalis perennans										2				
Pandorea pandorana subsp. *pandorana*	Wonga Vine		1	3	1	2		2	1	3	2	2	1	
Pellaea falcata	Sickle Fern		3	3	2	2				3	3	2	2	
Phytolacca octandra	Inkweed	Yes										2		3
Plantago debilis	Shade Plantain											1	2	
Plectranthus parviflorus					1				1	1				
Poa labillardierei var. *labillardierei*	Tussock		1							3	2	2	4	
Potentilla indica	Indian Strawberry	Yes											2	
Rubus fruticosus	Blackberry complex	Yes												3
Rubus parvifolius	Native Raspberry												1	1
Rumex crispus	Curled Dock	Yes											1	
Senecio linearifolius	Fireweed Groundsel									2	1	3	2	
Senecio madagascariensis	Fireweed	Yes							1					
Sida rhombifolia	Paddy's Lucerne	Yes											1	
Sigesbeckia orientalis													1	

Plant species recorded at 90 Garlicks Range Road – October 2015			Plots - Shale Hills Woodland (HN 529)							Plots - Western Sydney Dry Rainforest (HN538)				
Species	**Common Name**	**Exotic**	**001**	**003**	**007**	**015**	**016**	**018**	**028**	**012**	**013**	**020**	**022**	**027**
Solanum brownii	Violet Nightshade		2	2										
Solanum mauritianum	Wild Tobacco Bush	Yes												2
Solanum prinophyllum	Forest Nightshade											1		
Solanum pseudocapsicum	Madeira Winter Cherry	Yes		1					1	1		1	1	
Stellaria flaccida										2		3		
Stellaria media	Common Chickweed	Yes		2									2	3
Syncarpia glomulifera subsp. *glomulifera*	Turpentine											4		
Trifolium repens	White Clover	Yes											2	
Tylophora barbata	Bearded Tylophora								1	1				
Urtica incisa	Stinging Nettle			1						2	2	2	2	2
Verbena bonariensis	Purpletop	Yes											2	1
Veronica plebeia	Trailing Speedwell												2	

Appendix 2. Full vegetation alignment

Vegetation community (Niche 2012)	Area (ha)	Threatened Ecological Community	PCT code and name (abbrev.)	Formation (Keith 2004)	Class (Keith 2004)
Shale Plains Woodland	21.9	Cumberland Plain Woodland critically endangered ecological community (NSW and Commonwealth)	HN528: Grey Box - Forest Red Gum grassy woodland on flats	Grassy Woodlands	Coastal Valley Grassy Woodlands
Western Sydney Dry Rainforest	20.2	Western Sydney Dry Rainforest (NSW and Commonwealth)	HN538 Grey Myrtle dry rainforest of the Sydney Basin and South East Corner	Rainforests	Dry Rainforests
Total	**42.1**				

Multivariate analysis of floristic data

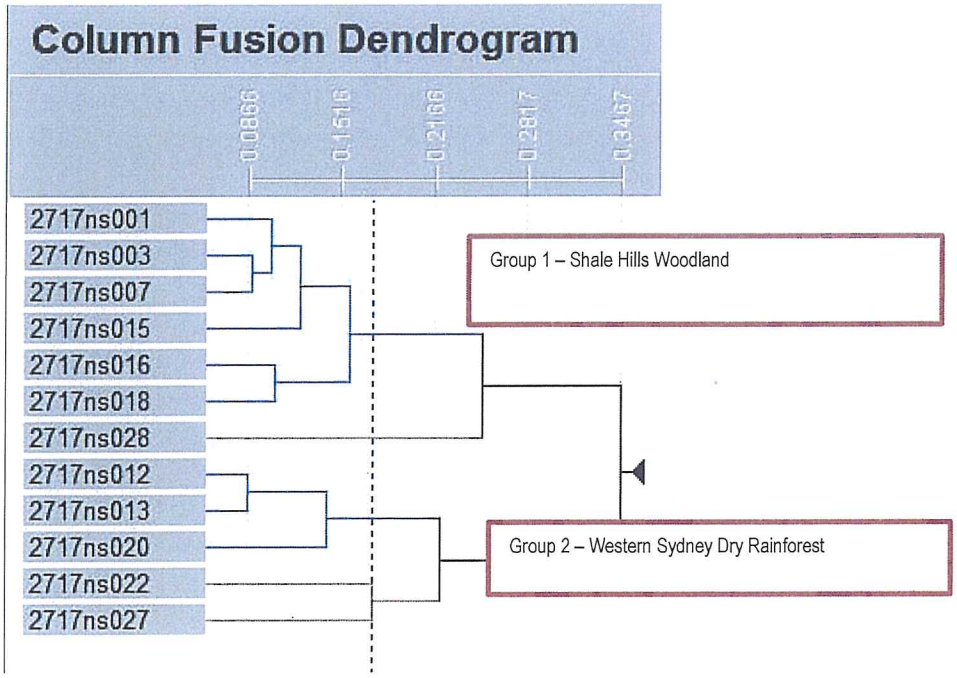

In order to support the selection of native vegetation types, as validated by Niche on-site, and the alignment to NSW Plant Community Types (PCTs), a multivariate analysis of the Braun-Blanquet scores from the floristic data provided in Appendix 1 was conducted. The row fusion dendrogram above illustrates the groupings of the floristic plots using a Bray-Curtis hierarchical agglomeration within the PATN biological statistical package. The groupings show the two vegetation communities at the BioBank site.

Vegetation community descriptions

Shale Plains Woodland

Shale Plains Woodland is located toward the northern portion of the BioBank site on the gentle slopes.

Dominant species of the community include the following:

Trees: *Eucalyptus tereticornis, Corymbia maculata, E. bosistoana* and *E. crebra.*

Shrubs and midstorey: *Clerodendrum tomentosum, Notelaea longifolia, Acacia implexa, Backhousia myrtifolia, Allocasuarina torulosa, Exocarpos cupressiformis, Melaleuca styphelioides, Brachychiton populneus,* and *Breynia oblongifolia*.

Ground Covers: *Adiantum aethiopicum, Geitonoplesium cymosum, Marsdenia rostrata, Pandorea pandorana subsp. pandorana, Glycine tabacina, Dichondra repens, Clematis aristata, Oplismenus aemulus, Carex inversa, Solanum brownii, Opercularia diphylla, Einadia hastata, Microlaena stipoides, Plectranthus parviflorus.*

EPBC Act status: Critically endangered ecological community

TSC Act status: Critically endangered ecological community

Condition: Weed cover occurs throughout the patch of Shale Plains Woodland. Weeds include: *Olea europaea subsp. cuspidata, Lantana camara, Ageratina spp., Opuntia stricta, Araujia hortorum, Asparagus asparagoides* and *Senecio madagascariensis.*

Western Sydney Dry Rainforest

Western Sydney Dry Rainforest is located on the steeper slopes and along Wattle Creek.

Dominant species of the community include the following:

Trees: Eucalyptus quadrangulata. *Eucalyptus bosistoana, Corymbia maculata. Syncarpia glomulifera subsp. glomulifera*

Shrubs and midstorey: *Ceratopetalum apetalum, Lomatia myricoides, Acacia spp., Bursaria spinosa, Dodonaea triquetra* and *Tristaniopsis laurina. Breynia oblongifolia, Brachychiton populneus Acacia melanoxylon Bursaria spinosa Melaleuca styphelioides, Callistemon salignus, Alectryon subcinereus, Allocasuarina torulosa, Exocarpos cupressiformis* and *Backhousia myrtifolia.*

Ground Covers: *Plectranthus parviflorus, Opercularia aspera, Aphanopetalum resinosum, Microlaena stipoides, Solanum pseudocapsicum, Senecio linearifolius, Marsdenia flavescens, Poa labillardierei var. labillardierei, Entolasia marginata, Clerodendrum tomentosum, Melicope micrococca, Christella dentata, Adiantum hispidulum, Dichondra repens, Oxalis perennans, Tylophora barbata, Carex inversa, Fimbristylis dichotoma, Solanum mauritianum, Abutilon oxycarpum var. oxycarpum, Adiantum aethiopicum, Morinda jasminoides, Lomandra micrantha, Glycine microphylla, Einadia hastata, Glycine tabacina, Cissus antarctica, Cayratia clematidea, Nyssanthes diffusa, Brunoniella australis, Commelina cyanea, Phytolacca octandra.*

EPBC Act status: Endangered

TSC Act status: Endangered

Condition: Introduced species cover is generally moderate to high throughout much of the site. Weeds include: *Olea europaea subsp. cuspidata, Lantana camara, Ageratina spp., Opuntia stricta, Araujia hortorum, Asparagus asparagoides, Senecio madagascariensis,* Ligustrum lucidum.

Appendix 4. BioBank plot site attribute data

Attribute Codes: ***NPS*** *– Native Plant Species Richness,* ***NOS*** *– Native Over-storey cover,* ***NMS*** *– Native Mid-storey cover,* ***NGCG*** *– Native Groundcover Grasses,* ***NGCS*** *- Native Groundcover Shrubs,* ***NGCO*** *- Native Groundcover Other,* ***EPC*** *– Exotic Plant Cover,* ***NTH*** *– Number of Trees with Hollows,* ***OR*** *– Over-storey Regeneration,* ***FL*** *– Length of Fallen Logs.*

Shale Hills Woodland plot data (HN529)

Plot	NPS	NOS	NMS	NGCG	NGCS	NGCO	EPC	NTH	OR	FL	Easting	Northing	Zone
001	20	4.5	9.5	4	2	4	54	2	1	21	278003	6230994	56
003	19	4	21	10	8	44	52.5	3	1	30	277828	6231001	56
007	15	5	0.5	4	0	34	47.5	3	1	31	277790	6230874	56
015	17	10	34	22	4	46	15	2	1	42	278300	6230709	56
016	10	6	10.5	4	4	24	37	1	1	21	278050	6230848	56
018	13	7.5	5.5	8	0	58	48	4	1	19	277532	6230730	56
028	18	5.5	19.5	6	0	8	19.5	1	1	40	277106	6230684	56

Western Sydney Dry Rainforest plot data (HN538)

Plot	NPS	NOS	NMS	NGCG	NGCS	NGCO	EPC	NTH	OR	FL	Easting	Northing	Zone
012	20	10	20	16	2	32	70	3	1	10	277813	6230817	56
013	21	10	25	14	2	28	70	2	1	8	277654	6230671	56
015	17	10	34	22	4	46	15	2	1	42	278300	6230709	56
020	22	5	25	8	0	60	40	2	1	15	277446	6230772	56
022	22	0	0	78	0	40	20.5	1	1	4	277267	6230679	56
027	7	0	40	10	0	20	80	0	1	0	277156	2630550	56

Appendix 5. Final BioBanking Credit Report

BioBanking credit report

NSW GOVERNMENT | Office of Environment & Heritage

This report identifies the number and type of credits required at a BIOBANK SITE

Date of report: 25/07/2016 Time: 3:12:33PM Calculator version: v4.0

Biobank details

Proposal ID:	0047/2015/2265B
Proposal name:	90 Garlicks Range Road
Proposal address:	90 Garlicks Range Road Orangeville NSW 2570
Proponent name:	
Proponent address:	19 Sorrell Street Parramatta NSW 2150
Proponent phone:	0458 000 590
Assessor name:	Luke Baker
Assessor address:	8 Joseph Street BLACKTOWN NSW 2148
Assessor phone:	0488 224 008
Assessor accreditation:	0112

Additional information required for approval:

- ☐ Use of local benchmark
- ☐ Expert report...
- ☐ Request for additional gain in site value

Ecosystem credits summary

Plant Community type	Area (ha)	Credits created
Grey Box - Forest Red Gum grassy woodland on shale of the southern Cumberland Plain, Sydney Basin Bioregion	21.90	273.00
Grey Myrtle dry rainforest of the Sydney Basin Bioregion and South East Corner Bioregion	20.20	248.00
Total	42.10	521

Credit profiles

1. Grey Myrtle dry rainforest of the Sydney Basin Bioregion and South East Corner Bioregion, (HN538)

Number of ecosystem credits created	248
IBRA sub-region	Cumberland - Hawkesbury/Nepean

2. Grey Box - Forest Red Gum grassy woodland on shale of the southern Cumberland Plain, Sydney Basin Bioregion, (HN529)

Number of ecosystem credits created	273
IBRA sub-region	Cumberland - Hawkesbury/Nepean

Species credits summary

Additional management actions

Additional management actions are required for:

Vegetation type or threatened species	Management action details
Grey Box - Forest Red Gum grassy woodland on shale of the southern Cumberland Plain, Sydney Basin Bioregion	Exclude commercial apiaries
Grey Box - Forest Red Gum grassy woodland on shale of the southern Cumberland Plain, Sydney Basin Bioregion	Exclude miscellaneous feral species
Grey Box - Forest Red Gum grassy woodland on shale of the southern Cumberland Plain, Sydney Basin Bioregion	Feral and/or over-abundant native herbivore control
Grey Box - Forest Red Gum grassy woodland on shale of the southern Cumberland Plain, Sydney Basin Bioregion	Fox control
Grey Box - Forest Red Gum grassy woodland on shale of the southern Cumberland Plain, Sydney Basin Bioregion	Slashing
Grey Myrtle dry rainforest of the Sydney Basin Bioregion and South East Corner Bioregion	Exclude commercial apiaries
Grey Myrtle dry rainforest of the Sydney Basin Bioregion and South East Corner Bioregion	Exclude miscellaneous feral species
Grey Myrtle dry rainforest of the Sydney Basin Bioregion and South East Corner Bioregion	Feral and/or over-abundant native herbivore control
Grey Myrtle dry rainforest of the Sydney Basin Bioregion and South East Corner Bioregion	Fox control

niche
Environment and Heritage

Niche Environment and Heritage

A specialist environmental and heritage consultancy.

Head Office

Niche Environment and Heritage
PO Box W36 Parramatta NSW 2150
Email: info@niche-eh.com

All mail correspondence should be through our Head Office