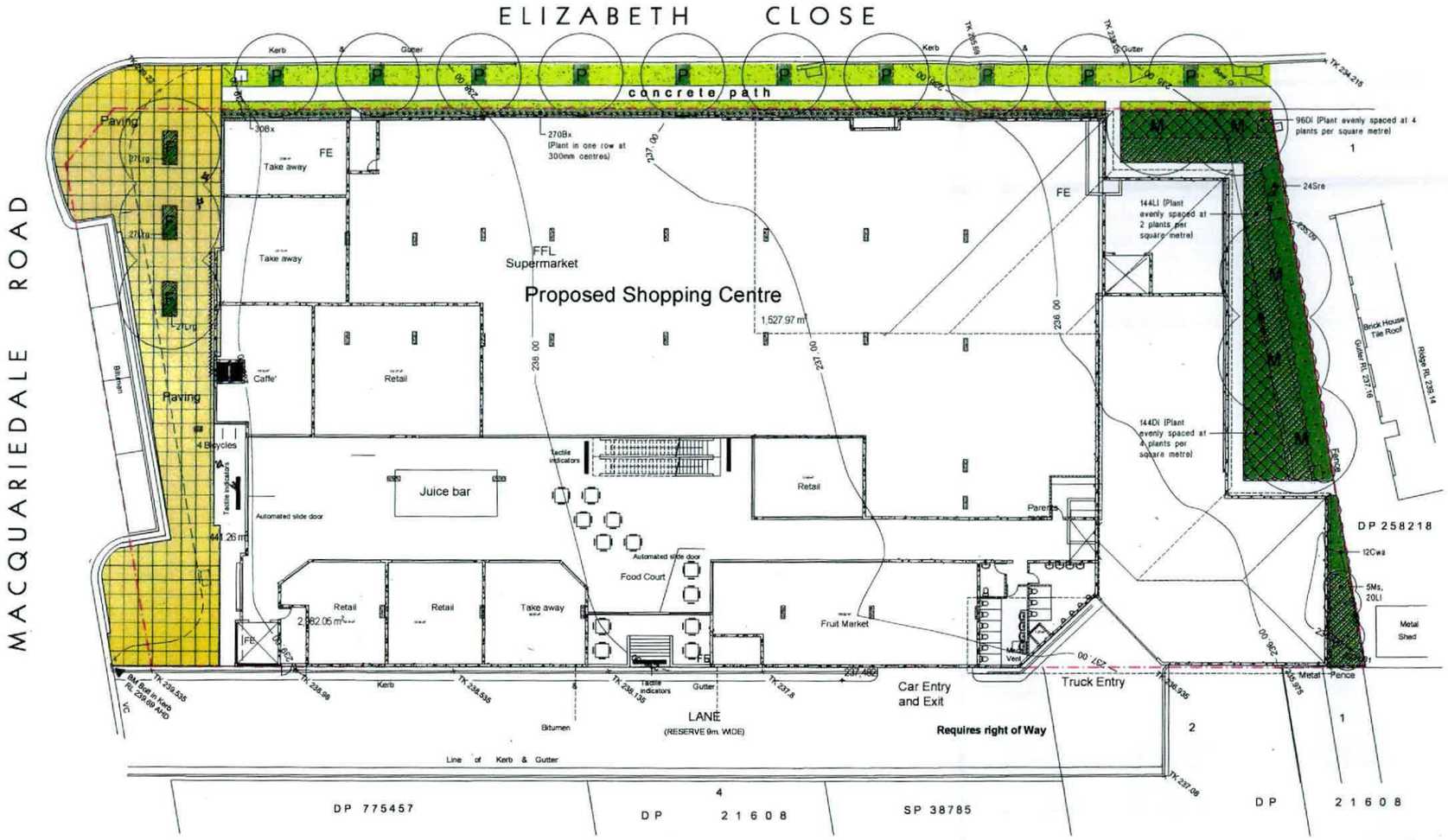

LANDSCAPE PLAN 1 : 200

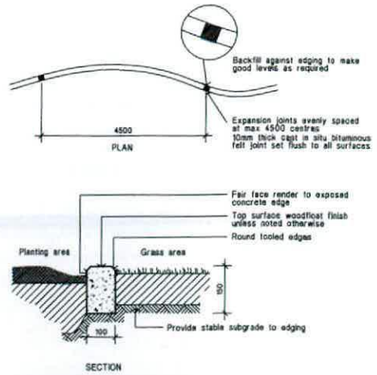

Concrete Garden Edge Detail. not.to.scale

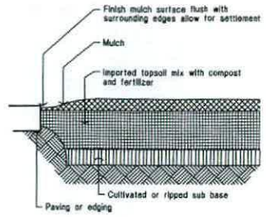

Ground preparation
Planting area using imported topsoil
Detail. Not.To.Scale.

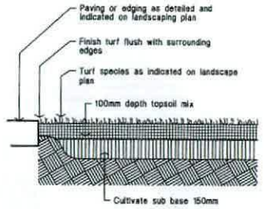

Ground preparation
Grassed area: turf using imported topsoil
Detail. Not.To.Scale.

LEGEND

turf
Excavate / grade all areas to be turfed to 120mm below required finished levels. Do not excavate within 1500mm of the trunk of any existing tree to be retained. Ensure that all surface water runoff is directed towards inlet pits, kerbs etc.. and away from buildings. Ensure that no ponding will occur. Rip the subgrade to 150mm. Install 100mm depth of imported topsoil. Just prior to spreading the turf, spread "Shirley's No. 17 lawn fertilizer" over the topsoil at the recommended rate. Lay "Kikuyu" turf rolls closely butted. Fill and small gaps with topsoil. Water thoroughly.

concrete edging
Refer to detail

paving
New paving to public domain and outdoor eating area. Paving to be to selected in consultation with Wollondilly shire council

planting areas
Ensure that the mass planting areas have been excavated to 300mm below finished levels. Rip to a further depth of 150mm. Supply and install 300mm soil mix. Soil mix to comprise of one part approved compost to three parts topsoil. Topsoil shall be either imported topsoil or stockpiled site topsoil (if suitable ie: No clay). Install 75mm depth of selected mulch.

maintenance:
All landscape works are to be maintained for a period of three months from the date of practical completion. This includes all watering, weeding, spraying and re-mulching necessary to achieve vigorous growth. Any defects which arise during this period are to be rectified immediately. Any plants or areas of turf which fail during this period are to be replaced at no additional cost.

irrigation:
All planting areas on the landscape plan are to be covered by a fully automatic drip irrigation system. All pipework is to be PVC to satisfy AS 1477. All installation is to satisfy the Sydney Water Code and AS 3500. The system is to be installed by a suitable licenced contractor. All equipment and workmanship is to be guaranteed for a minimum period of 12 months.

fencing:
For all fencing types and materials refer to the Architects plans.

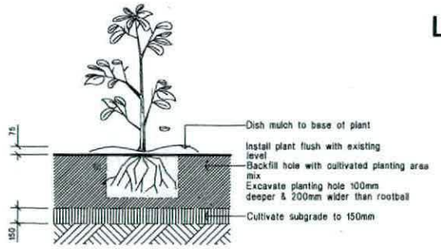

Planting in garden beds
Detail. Not.To.Scale.

PLANT SCHEDULE

Code	Latin Name (Common Name - Mature Height)	Qty	Size	Stake
Trees				
F	Fraxinus Pennsylvanica (American ash - 11m)	3	200 litre	yes
M	Eucalyptus maculata (Spotted gum - 12m)	5	35 litre	yes
P	Pyrus calleryana 'Capital' (Capital callery pear - 6m)	10	200 litre	yes
Shrubs				
Bx	Buxus microphylla 'Japonica' (Box - 1m)	300	5 litre	-
Cwa	Callistemon 'White Anzac' (White Bottlebrush - 1.5m)	12	5 litre	-
Ms	Melaleuca stypheloides (Prickly paperbark - 8m)	5	5 litre	-
Sre	Syzygium australe 'Resilience' (Lilly Pilly - 3m)	24	5 litre	-
Groundcovers				
Di	Dietes iridoides (Wild iris - 0.8m)	240	150mm pot	
Li	Lomandra longifolia (Lomandra - 1m)	164	150mm pot	
Lrg	Liriope 'Evergreen Giant' (Giant liriope - 0.5m)	81	150mm pot	

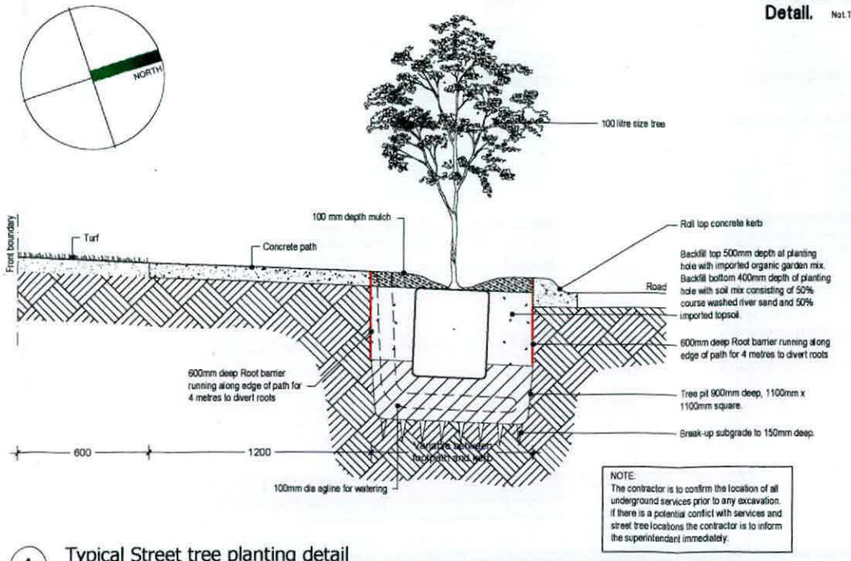

NOTE:
The contractor is to confirm the location of all underground services prior to any excavation. If there is a potential conflict with services and street tree locations the contractor is to inform the superintendant immediately.

(A) Typical Street tree planting detail
Scale: 1:20

DATE	AMENDMENT	ISSUE

rfa landscape architects
+ RAY FUGGLE ASSOCIATES landscape architects
12A 341 PENNANT HILLS RD CARLINGFORD NSW 2118
p 02 9980 6022
f 02 9980 6023
m 0412 294 712
abn 76 003 773 839
email: RAY@fuggle.net.au

Project:
PROPOSED SHOPPING CENTRE

No. 1 MacQuariedale Road,
APPIN

Client:

Drawing Title:
LANDSCAPE PLAN

issue: DA	date: 3011/17	issue no: A	
file name: c:\		drawing No:	
drawn: HK	scale: 1:200 @ A1		
checked: RF	project No: 4302a	L-01	